GET IN AND GO

The wheel and telescopic wheel loaders
KL12.5/KL14.5/KL18.5/KL19.5/KL25.5/KL25.5T

KRAMER
on the safe side

A broad range of application areas

Discover the all-wheel wheel loaders and telescopic wheel loaders in the 1.8 to 4.6-tonne class

The compact equipment is the main segment of Kramer-Werke GmbH. The efficient machines have been planned down to the finest detail and impress with the tried-and-tested design principle, which provides unbeatable manoeuvrability. Due to their narrow and low design, the machines are also in demand where large machines cannot fit: tight access roads, work in stables, warehouses or other confined conditions.

On the safe side with Kramer

Rich in tradition, the Kramer brand has been established on the market for many years and in particular stands for one value: **Safety.** The high quality of the innovative machines is only one aspect of this. Kramer is also a safe choice as a company for customers and dealers because its experience and innovations ensure secure investments and security for the future. In short – you are always on the safe side with Kramer: **"Kramer – on the safe side!"**

ON THE SAFE SIDE

Table of contents

Operating and performance data wheel LOADERS AND TELESCOPIC WHEEL LOADERS	KL12.5	KL14.5	KL18.5	KL19.5
Engine output (optional) [kW]	18.5	28.5	34.3	34.3 (41.1)
Bucket capacity [m³]	0.35	0.36	0.45	0.55
Lift capacity [kN]	11.5	15.8	37.0	32.5
Bucket tipping load [kg]	1,200	1,420	1,800	1,980
Payload on pallet forks S=1.25 [kg]	750	900	1,200	1,600
Operating weight [kg]*	1,898	2,104	2,925	3,200 - 4,300

* Weight as standard with a full tank + 75kg heavy operator + standard bucket weight

	KL19.5L	KL25.5	KL25.5L	KL25.5T
Engine output (optional) [kW]	34.3 (41.1)	34.3 (41.1)	34.3 (41.1)	34.3 (41.1)
Bucket capacity [m³]	0.55	0.65	0.65	0.65
Lift capacity [kN]	26.5	32.5	26.5	32.5
Bucket tipping load [kg]	1,780	2,340	2,140	2,500
Payload on pallet forks S=1.25 [kg]	1,450	1,750	1,600	1,650
Operating weight [kg]*	3,200 - 4,300	3,200 - 4,300	3,200 - 4,300	3,500 - 4,600

Why split what belongs together?
Kramer – A unique system

The Kramer brand stands for all wheel steer loaders, telescopic wheel loaders and telehandlers with extreme manoeuvrability, all-terrain mobility and high efficiency. The wheel loaders impress with their high level of stability thanks to the time-tested and proven, one-piece vehicle frame.

Due to this special vehicle setup, there is no shifting of the centre of gravity through steering movements. Only the wheels move when steering due to the Ackermann steering. Thus, high stability is given even with a tight turning circle, on uneven ground conditions and with maximum payloads.

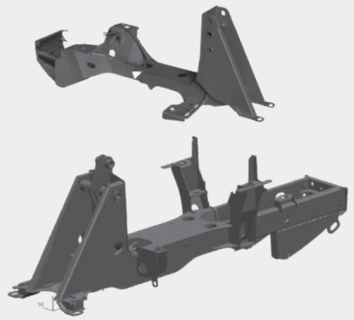

The benefits at a glance

High level of stability

The wheel loaders and telescopic wheel loaders are designed with a one-piece chassis that prevents shifts in the centre of gravity – even with a full steering lock. This makes the vehicles with a high level of stability convincing – even in uneven ground conditions.

Enormous manoeuvrability

The all-wheel steering and the steering angle of 38 degrees on the front and rear axle allow you a high degree of manoeuvrability. Some steering manoeuvres therefore become unnecessary, resulting in shorter cycle times.

Constant payload

The undivided chassis prevents the distance between the counterweight and the loader unit from changing. The result: Constant leverage that makes working safe in all load situations. In the process, the payload always stays the same, independent of the steering angle.

Undivided chassis for a high level of stability ...

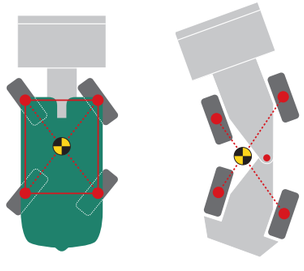

... without a shift in the centre of gravity.

Turning made easy with all-wheel steering ...

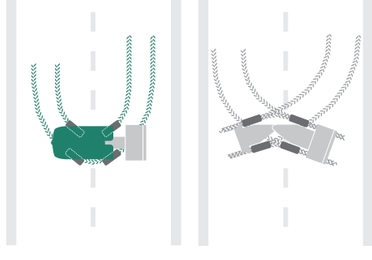

... instead of time-consuming manoeuvring with an articulated joint.

Constant leverage for constant payload

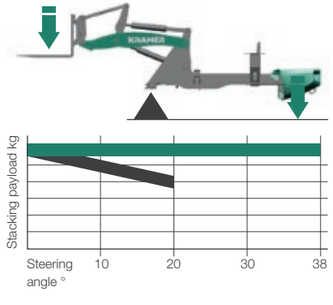

Flexibility in application

The right type of steering system for any application

The undivided vehicle frame forms the basis for three (KL12.5, KL14.5) and two (KL18.5 - KL25.5T) different steering types. A wheel loader's design principle decides how it is used and for which applications. The steering system is the crucial factor here.

All-wheel steering

- 2 x 38 degree steering angle on the front and rear axle ensure quick work processes
- Optimised routes
- Tight turning circle

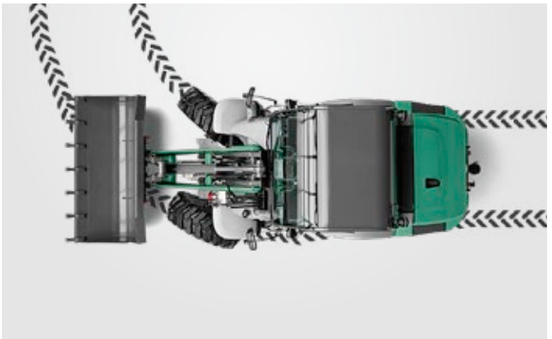

Front wheel steering (optional)

- Safe and familiar road travel at high speed
- Easy guidance of special attachments
- Familiar steering system
- Ideal for trailer operation

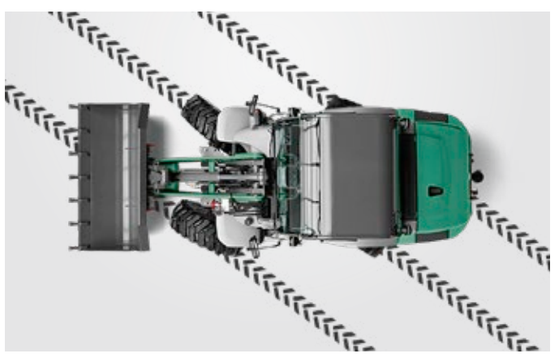

Crab steering (optional)*

- Manoeuvrability in the smallest space
- Precise positioning in the tightest conditions
- Moving of special attachments
- Easily move away from walls and trenches

* available for the models KL12.5 and KL14.5

All-wheel steering: particularly manoeuvrable in tight spaces

All-wheel and articulated steering in a comparison

Example: 360° turning manoeuvre over outer edge of tyres

With the all-wheel steering, the turning circle is much smaller compared to the articulated steering (see green line). This is achieved by the steering lock on the front and rear axle, while only the front carriage moves with the articulated steering.

All-wheel steering **Articulated steering** (competition)

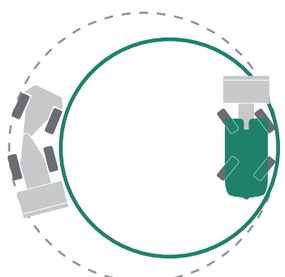

Compact dimensions and optimal power to weight ratio

Power in a perfect proportion

The compact wheel loaders and telescopic wheel loaders by Kramer are among the most versatile machines on the farm. Tasks such as bale handling, silage cutting, materials handling, and feeding and cleaning work can be taken care of efficiently and quickly. The machines are small enough to go anywhere and strong enough for their application.

The design principle of the undivided vehicle frame is responsible for the extremely compact dimensions. In addition, excellent power ratings are achieved due to the ratio of operating weight, payload and tipping load, which are unparalleled in this vehicle class.

KL12.5 and KL14.5:
Even suitable for very low clearance heights

Top performance of the dimensions and power to weight ratio:

- perfect ratio between payload and operating weight
- easy transport on 3.5 t trailer (KL12.5, KL14.5, KL18.5)
- economic use that saves time and fuel thanks to the small turning radius
- economic power to weight ratio

Low overall height of less than 2.5 m for versatile applications

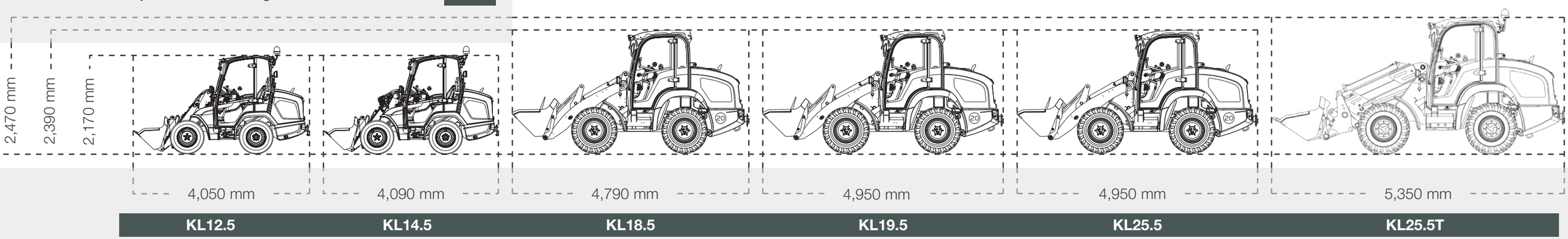

Powerful engines
Efficient fuel consumption

The KL12.5 and KL14.5 wheel loaders are both equipped with exhaust emission stage V Yanmar engines. The KL12.5 is driven by an 18.5 kW engine without an exhaust emission aftertreatment. The even more performance efficient KL14.5 is available with a 28.5 kW engine. Here, the exhaust emissions are treated with DOC and DPF.

The models KL18.5 through to KL25.5T likewise have a Yanmar engine and fulfil the exhaust emission stage V. The engines with 34.3 kW (standard) and 41.1 kW (optional for KL19.5, KL25.5, KL25.5T) are equipped with a DOC and DPF.

Top performance of the engines:

- high torque and economical engines by Yanmar
- modern exhaust aftertreatment with DOC + DPF
- newest engine technology with exhaust emission stage V

Overview of engines	KL12.5 Standard	KL14.5 Standard	KL18.5 Standard	KL19.5 Standard (Option)	KL25.5 Standard (Option)	KL25.5T Standard (Option)
Engine manufacturer	Yanmar	Yanmar	Yanmar	Yanmar	Yanmar	Yanmar
Output [kw/hp]	18.5/25	28.5/39	34.3/46	34.3/46 (41.1/55)	34.3/46 (41.1/55)	34.3/46 (41.1/55)
Exhaust aftertreatment system	-	DOC+DPF	DOC+DPF	DOC+DPF	DOC+DPF	DOC+DPF
Exhaust fumes level (EU exhaust fumes standard)	Stage V	Stage V	Stage V	Stage V	Stage V	Stage V

Exhaust fume aftertreatment systems

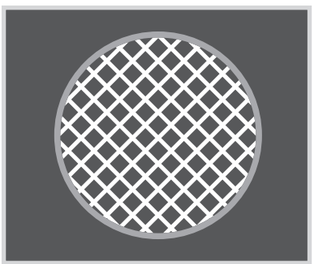

Diesel oxidation catalytic converter (DOC)
Catalytic converters are used these days to reduce emissions in many cars and lorries. The diesel oxidation catalytic converter has the same functionality. Without the movement of mechanical parts, it triggers chemical processes that reduce emissions.

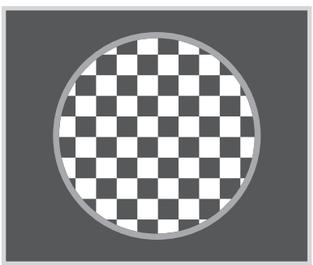

Diesel particle filter (DPF)
The diesel particulate filter is used in connection with an oxidation catalytic converter to remove most of the nitrogen oxides, soot particles and non-combusted hydrocarbons from the combusted diesel fuel. The diesel particulate filter contains a porous honeycomb structure that catches the soot when it passes through. When the soot has accumulated to a certain extent, the machine's electronic system triggers fuel injections, which bring the non-combusted fuel into the oxidation catalytic converter, which is located before the filter. There it triggers an exothermic reaction that heats the exhaust fumes so much that the soot in the diesel particulate filter is combusted. This process is also known as regeneration.

Optimised running smoothness: Economical and powerful engines in all Kramer models.

Performance curve of Yanmar 3TNV82A-B; 18.5 kW; stage V (standard)

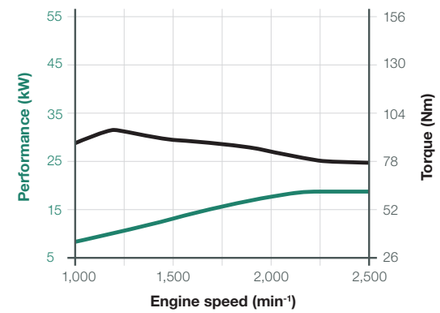

Performance curve of Yanmar 3TNV86CT; 28.5 kW; stage V (standard)

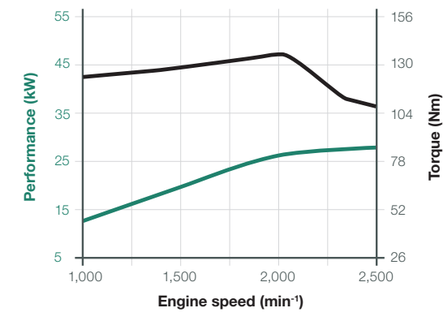

Performance curve of Yanmar 4TNV88C; 34.3 kW; stage V (standard)

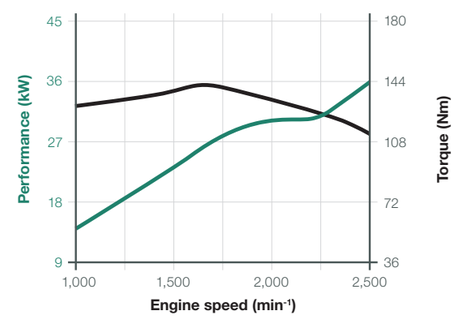

Performance curve of Yanmar 4TNV86CT; 41.1 kW; stage V (option)

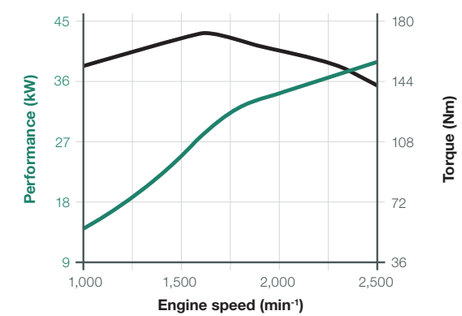

Made for application

Discover the product range of the compact class

The wheel loaders: KL12.5, KL14.5

The KL12.5 and KL14.5 wheel loaders are the smallest models by Kramer. When designing and developing, the focus was on the simple and intuitive operation, which makes everyday work much easier for the operator. With its very compact design, they are great helpers when working in confined spaces. The machines are versatile in use thanks to their overall height and also allow for applications inside buildings, such as working in stables. The machines can easily be transported on 3.5 tonne trailers thanks to their very low dead weight.

Modern design, technology, performance and comfort: Kramer wheel loaders set the standard.

Top-performance telescopic wheel loader KL25.5T:

+ 50% stroke and dumping height

+ 42% stacking height

+ 38% load-over height

e.g. for storing straw and hay, stacking round bales, filling high-sided feed mixers or trailers

The wheel loaders and telescopic wheel loaders: KL18.5, KL19.5, KL25.5, KL25.5T

The wheel loaders and telescopic wheel loaders of the compact class are agile in their movements, dynamic in their power delivery and slim in their design. With an optimised power to weight ratio, a low shipping weight and constantly high payload, they are the ideal helpers when it comes to stacking, loading material or feeding animals.

With the Kramer telescope technology of the KL25.5T, even greater lift heights and reaches are reached comfortably, safely and precisely. This significantly improves productivity and economic efficiency.

Modern cabin design
First-class comfort

The innovative cabin design ensures added-value in terms of comfort and operator-friendliness within the compact wheel loader segment, whereby the functionality and ergonomics are at the forefront.

Large areas of glass combined with narrow cabin pillars ensure excellent all-round visibility. The special hydraulic oil and diesel tank shape under the front window enables the operator perfect visibility of the attachment. There are many functional and ergonomic features, as well as numerous storage compartments in the side console. Furthermore, all of the important colour-coded switches are placed within reach of the right hand.

Comfortable joystick:
Possible to switch between hare and tortoise on the joystick itself.

A spacious, quiet and extensively glazed cabin provides the perfect conditions to get through everyday operation safely.

Technical highlights
Simple operation – Innovative cabin design

Cabin entry

The wide entry includes additional steps, thus ensuring a comfortable entry and exit. Two handles attached to the cabin aid the operator in safely getting to their working area. Furthermore, the cabin door is adjustable by 180 degrees and can be locked to the machine.

Smart Driving PRO

The feature on the KL14.5 includes three operator modes that can be changed by pressing a button in order to meet the respective requirements most efficiently. The Power Mode (PWR) is suited to bucket work, the ECO Mode to stacking work or road travel and the accelerator pedal mode (CSD) to hydraulic attachments.

Steering column

The optional incline-adjustable steering column can be adapted to the operator's needs. The steering wheel is made of a high-quality and non-slip material. Furthermore, there is a modern visual display with automatic indicator reset on the steering column.

Centre tunnel

The centre tunnel in the cabin floor has a height of just 5 cm thanks to the design of the vehicle frame. Thus enabling the operator comfortable entry and exit. The centre tunnel is likewise covered with e rubber mat and can be easily cleaned.

Cleaning flap

The cleaning flap is on the right side of the cabin. The flap is opened upwards using a handle and is fixed by an attenuator. Simple access is thus provided to the cabin air filter and the main control unit. Cleaning the cabin floor can be performed very easily.

Other cabin features

A continental radio with USB connection and Bluetooth hands-free system is available as an option. The temperature and ventilation regulation is positioned in the side console. The optional air-conditioning system for the KL14.5 ensures a comfortable climate, even on the warmer days. Furthermore, the vehicle can be equipped with an automatic engine stop via seat contact.

Different loader units
Work easily with loads

The loader units for both machines are made of a high-strength and torsion-resistant box profile. The large lift and tearout forces, as well as parallel guidance of pallet forks throughout the total height are achieved with Z-kinematics. The loader unit's even more sturdy construction for the KL14.5 ensures even higher payload.

The automatic load stabiliser is optionally available. The load stabiliser dampens oscillations of the loader unit and ensures maximum operational comfort. The safe handling of heavy loads is therefore also guaranteed on uneven ground conditions. The automatic function automatically switches on the load stabiliser after a speed of 8 km/h (transport operation) or automatically switches it off under 8 km/h (loading operation). In addition, it is possible to continuously enable or disable the load stabiliser for certain applications.

Automatic load stabiliser
prevents the machine from swaying and also enable comfortable operation and reduced material loss when subject to difficult conditions.

Sturdy loader unit with Z-kinematics, visual position display and optional load hook.

Top-performance wheel loaders KL12.5 and KL14.5:

- powerful lift capacity:
  KL12.5 - 11.5 kN
  KL14.5 - 15.8 kN
- spacious cabin with very good all-round visibility and a variety of options
- three types of steering for maximum flexibility
- Smart Driving PRO with the option of three operating modes for the KL14.5

Visual position display

for fork (yellow) and bucket (red) is a great advantage to the inexperienced operator or during constantly changing operation, such as agricultural large enterprises. With the position display, a high level of precision is achieved in the inclination angle of the attachment to the ground.

Powerflow

The KL14.5 wheel loader continues to impress with optional powerflow auxiliary hydraulics. The hydraulics are in a compact design on the left-hand side of the loader unit and ensure perfect visibility of the attachment. No matter whether used with a snow blower, a mulcher or a sweeping machine - the KL14.5 is diversely applicable with the powerflow function and ready for use in each application during the year.

Concept solution for system bearer	KL12.5	KL14.5
3rd control circuit [l/min]*	20	30
Power flow performance hydraulics [l/min]*	-	56

*max. Pump values

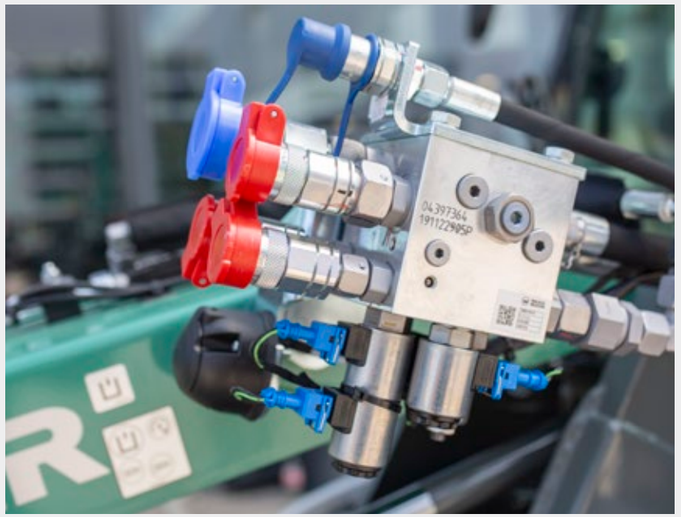

Pressure release of 3rd control circuit

The button for optional pressure release of the 3rd control circuit is centrally fitted to the loader unit. As a result, different attachments can be quickly and efficiently changed without the need to switch off the engine.

Machine highlights of the KL12.5 / KL14.5

The compact genius among wheel loaders

Excellent performance values
with compact dimensions and low dead weight.

Innovative cabin design
Glazed areas with visual conduits ensure optimal visibility. The wide step and the door which locks to the rear provide comfortable entry and exit. The side console contains many functional and ergonomic features. Optionally available, among others, is the incline-adjustable steering column.

Smart Driving PRO (KL14.5)
Three operating that can be changed at the press of a button (PWR - Power Mode, ECO - Eco Mode and CSD - low-speed control) support the operator in the respective applications.

Flexible in application
with a standard 3rd control circuit integrated into the joystick and optional pressure release lever on the loader unit. The Powerflow for the KL14.5 adds a powerful drive to the hydraulic attachments.

The two speed levels
can be easily changed while driving. With the KL14.5, the drive is also possible as a sprinter up to 30 km/h.

Loader unit with Z-kinematics
for high lift capacities and tear-out forces and an exact parallel guidance over the entire lift height.

Two engine classes
by Yanmar with exhaust emission stage V KL12.5 is equipped with an 18.5 kW engine and KL14.5 with a 28.5 kW engine incl. DOC and DPF.

Work efficiently
thanks to the hydraulic quickhitch system, load stabiliser and visual position display for bucket and fork.

Four wheel hub motors
for sensitive work and high pushing power.

Three steering types
support maximum manoeuvrability. All-wheel steering as standard and the optional steering types like front wheel and crab steering provide more in terms of flexibility. Switching between the steering types is carried out mechanically.

One-piece vehicle frame
for great manoeuvrability during constant stability.

Large selection of tyre options
for a wide range of application areas.

Stacking at its best
Maximum flexibility in everyday work

The Kramer wheel loader KL18.5 is particularly distinguished by its low dead weight. The machine weight can be adapted to every work situation due to the optional additional weight Smart Ballast, which is simply and inconspicuously positioned in the tail. With its manoeuvrability, high payload, stack tipping load and transportability, the machine is suitable for different application areas.

The service package is rounded off by safety, comfort and a variety of options which allow for application year-round.

Special design of the loader unit ensure high lift and tearout forces. Commercial pallets can be moved without any trouble.

Smart Ballast - optional additional weights in the tail

The Smart Ballast weights enable adaptation of the machine's weight or the stack tipping load up to 1,700 kg depending on the user requirement, whereby it is possible to flexibly switch between the working and transportation situation.

Top-performance wheel loader KL18.5:

- powerful lift capacity of 37 kN
- perfect performance characteristics of 34.3 kW / 46 hp
- optimal transport weight of 2,685 kg incl. cabin
- high bucket pivotal point of 2,840 mm
- flexible Smart Ballast weights of a total of 100 kg

The Smart Ballast weights weigh a total of 100 kg. Each of the eight weights weighs a portable 12.5 kg.

Working comfortably
For ideal working conditions

Simple operation and functionality are the focus of the machine series. From the operator's seat to the steering wheel, all detail where consequently aligned with the needs of the operator. The operator has plenty of room and everything is always in view here.

The compact wheel and telescopic wheel loaders from Kramer have proven to be real space miracles in terms of cabin technology and their equipment ensures fatigue-free working for many hours. The clearly arranged operator's controls create an environment in which the operator's controls can work comfortably, focused and productively. The joystick, as the heart of the machine, provides secure, simple and intuitive operation.

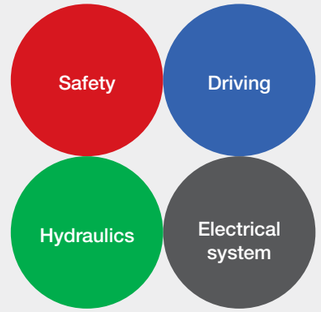

Colour -coding of the switches:
four colours for even more safety.

Panoramic cabin for an excellent overview of the attachment and the working environment.

Technical highlights
Simple operation – Innovative cabin design

Cabin entry

The cabin can be accessed through the large entry area. The undivided vehicle frame also makes it possible to comfortably enter at maximum steering lock. The entry is designed like steps. The grab handles are in an ergonomically favourable position to make it easier for the operator to enter and exit.

All-round visibility

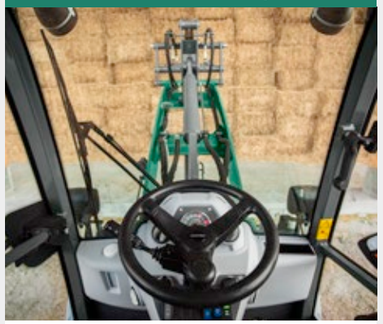

The central seat position of the operator offers a 360° all-round visibility. "Blind spots" are avoided thanks to the particularly clearly arranged design. You can even see everything to the rear. Even when the telehandler system is extended on the KL25.5T, the operator has a perfect view of the attachment.

Vehicle height

The machines offer the best prerequisites for low headrooms. All machines have a total height of under 2.5 m. It is possible to easily transport on a 3.5 t trailer due to the compact design of the KL18.5 wheel loader.

Joystick

The joystick shows its strengths above all when things get dark. In the night design, the different touch buttons and wheels light up in different colours. The operator can then immediately identify the respective function and his vehicle is safely under control.

Switch concept

The respective functional group is very quick and easy to identify due to the colour-coded switches. Red = safety, green = hydraulics, blue = travel and grey = electrical system. This ensures the operator a convenient and safe operation without the risk of being confused. The result is increased working efficiency for the operator.

Other cabin features

The powerful heater with window ventilation and heating nozzles in the foot well ensures comfortable working, even on cold days. A fully integrated air-conditioning system is optionally available. The combined brake-inch pedal allows for precise manoeuvring, even at high engine speed.

Powerful hydraulics
For sensitively controlling the machine

Connect and disconnect different attachments, sensitive control, quick work cycles and all of this with a low noise level in the cab: The technology behind the work hydraulics of our machines makes this possible.

The work hydraulics are powered by powerful gear pumps, which ensure quick work cycles of the loader unit and allow for the operation of special attachments via the 3rd control circuit, if necessary with continuous function.

Pressure release of 3rd control circuit:
Easily couple and uncouple attachments with hydraulic additional function

Powerflow*

The machines can be equipped with various hydraulic attachments for the many areas of application and industry, and become true multi-functional talents.

No matter what the job at hand is, or whether used with a rotary sweeper, snow blower or mulcher, the Kramer wheel loaders are applicable during all four seasons.

*not for the KL18.5

powerflow

Concept solution for system bearer	KL18.5	KL19.5	KL25.5	KL25.5T
3rd control circuit [l/min]*	56	56	56	56
Power flow performance hydraulics [l/min]*	-	90	90	90

*max. Pump values

High-speed gearbox - stepless up to 30 km/h

Optimal prerequisites provide the stepless hydrostat high-speed gearbox up to 30 km/h. This gives the wheel loader both optimal tractive force and a lower diesel consumption.

The high-speed gears are used for movement on straights and on roads.

Three loader units

Depending on requirements there are up to three different loader units available. The standard and optional extended loader unit are both parallel-guided and ensure a consistent lift capacity as well as a safe operation during materials handling.

Standard loader unit (P-kinematics)

The parallel-guided loader unit ensures constant lift capacity and a safe operation in materials handling. Due to the tilt back angle of up to 45° and the tilt-out angle of up to 45°, the wheel loader does not lose any material in bucket application, even when it is very full, allowing for a complete emptying of the bucket.

- Precise and safe working possible
- High tear-out forces
- Precise parallel guidance over the entire lift height

Extended loader unit (P-kinematics)

Specific customer wishes can be met even more flexibly due to the extended loader unit. Among other things, the range, payload and lift height change compared to the standard loader unit.

- Optimal view of the quickhitch facility and the attachment
- Increased lift height
- Extension of the loader unit by 190 mm (KL19.5, KL25.5)

Telehandler system (Z-kinematics)

The view of the attachment is exceptional thanks to the compact modular design of the telehandler system. The advantages of Z-kinematics: In the case of equal size cylinders, dumping in a bucket creates a higher tearout force since pressure is applied to the piston side of the hydraulic cylinder when filling the bucket.

- High tear-out forces
- Good view of the quick coupler system and the attachment
- Additional load-over and stacking height as well as range and dumping width

Machine highlights of the KL18.5 - KL25.5T

Sturdy on the outside and intelligent on the inside

Reduced operating costs
through optimum power to weight ratio and compact dimensions.

More reach and lift height
due to a telescoping loader unit.

Fatigue-free work
thanks to the spacious and ergonomic cabin, which is installed as a standard (KL25.5) or optionally.

Gentle retraction and
extension thanks to the final position dampening in the retract and extension.

High reliability
through easily accessible maintenance points and time-tested and proven components.

Flexible in application
with a 3rd control circuit, unpressurised return flow with drain line and front outlet.

High bucket apron, long bucket bottom as well as a large tilt in and tilt back angle for
a safe and quick material transport with high volumetric efficiency.

Smart Ballast (KL18.5)
easily and quickly adjust the payload and weight of the machine.

The hydraulically activated quickhitch facility
makes the Kramer an all-rounder in seconds without leaving the operator's seat. Efficient work with a parallel-guided loader unit with P-kinematics for wheel loaders and with Z-kinematics for the telescopic wheel loader.

Variable drive system -
with two types of steering (all-wheel steering and optional front wheel steering) and a travel speed of up to 30 km/h. Furthermore, there are two travel speed settings.

Excellent traction
thanks to 100% connectible differential lock in the front axle for KL25.5 and KL25.5 (option for KL18.5, KL19.5) and the variety of tyre options.

Wide and safe entry
thanks to the undivided chassis with all-wheel steering.

A variety of tasks
Always the right attachments

Regardless of what challenges your application holds for you: With the different attachments, you will always have a handle on the situation. Thanks to the hydraulic quickhitch system, you can adapt your Kramer wheel loader to any situation in no time. Standard attachments can even be changed in less than 10 seconds.

The attachment is based on your needs. You can find out more about our attachments at:
www.kramer.de/attachments

Product range of attachments


Pallet fork


Pallet forks,
fold-down


Pallet forks,
hydraulic parallel adjustment

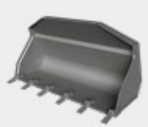
Standard bucket with rip-out teeth

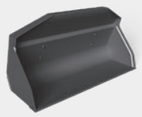
Standard bucket without rip-out teeth


Standard bucket without rip-out teeth
with screwed-on blade


Bale spear


Round bale fork


Dung fork


Multifunctional fork

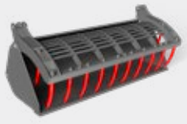
Silage grab bucket model A


Load hook,
slip-on


Rotary sweeper


Snowplough model A


Snowplough model B

Exact specifications and availabilities of attachments vary by model and country.
Your competent Kramer dealer will be happy to help you.

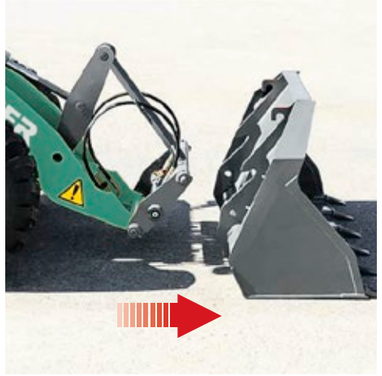

Hydraulic quick-change system - The Kramer quickhitch system: Approach the attachment, pick up the attachment hydraulically from the operator's seat and lock it using the touch slide on the joystick. The lock cylinder is located outside of the pivot point of the quickhitch plate and is thus not in the contamination area.

Tread product range

- Good self-cleaning
- Good flank protection
- High running performance

Universal tread - BKT
KL12.5, KL14.5

- High running performance
- High level of traction
- Good mobility on soft ground
- Good self-cleaning

Construction machine tread - Mitas
KL12.5

- Good track guiding
- High level of driving safety
- Good self-cleaning
- High running performance

Traction tread - Mitas
KL12.5, KL14.5

- Good self-cleaning
- Good lateral stability
- High running performance, especially when used on hard and aggressive substrates
- High level of traction

Industrial tread - Michelin
KL12.5 - KL14.5

- Good winter serviceability
- High running performance
- Noise-optimised
- For applications on and off of the road

Municipal tread - Continental
KL12.5, KL14.5

- High running performance
- Good self-cleaning
- Good mobility on soft ground
- High level of traction

Universal tread - Alliance
KL18.5 - KL25.5T

- High lift capacity
- High level of traction
- Excellent stability and improved operating comfort
- High level of running smoothness

Multi-purpose tread - Michelin
KL19.5 - KL25.5T

- Good resistance
- Smooth running on the road
- High level of traction
- For applications on and off of the road

Multi-purpose tread - Mitas
KL18.5 - KL25.5T

- Good self-cleaning
- Ideal for loamy ground
- High level of traction
- Smooth running on the road

Traction tread - Mitas Premium
KL18.5 - KL25.5T

- Smooth running on the road
- Good resistance
- Well-suited in sand and gravel

Municipal tread - Alliance
KL19.5 - KL25.5T

- High level of traction
- Well-suited in sand and gravel
- Good resistance

Municipal tread - Nokian
KL19.5 - KL25.5T

Choosing the right tyres is crucial when it comes to using your wheel loader. Exact tyre specifications and availabilities vary by model and country. Your competent Kramer dealer will be happy to help you.

Top Performance

Dimensions and power to weight ratio

- perfect ratio between payload and operating weight
- easy transport on 3.5 t trailers (KL12.5, KL14.5, KL18.5)
- economic use that saves time and fuel thanks to the small turning radius
- economic power to weight ratio

Engines

- high torque and economical engines by Yanmar
- the latest exhaust aftertreatment with DOC + DPF
- newest engine technology with exhaust emission stage V

Wheel loader KL12.5 and KL14.5

- powerful lift capacity: KL12.5 - 11.5 kN; KL14.5 - 15.8 kN
- spacious cabin with very good all-round visibility and a variety of options
- three types of steering for maximum flexibility
- Smart Driving PRO with the option of three operating modes for the KL14.5

Wheel loader KL18.5

- powerful lift capacity of 37 kN
- perfect performance characteristics of 34.3 kW / 46 hp
- optimal transport weight of 2,685 kg incl. cabin
- high bucket pivotal point of 2,840 mm
- flexible Smart Ballast weights of a total of 100 kg

Telescopic wheel loader KL25.5T

- extra 50% lift height and dumping height
- extra 42% stacking height
- extra 38% load-over height

e.g. for the storage of straw and hay, stacking of round bales, filling of highly manoeuvrable feed mixers or attachments

Technical Data

Engine	Unit	KL12.5	KL14.5	KL18.5	KL19.5	KL25.5	KL25.5T
Make	–	Yanmar	Yanmar	Yanmar	Yanmar	Yanmar	Yanmar
Type/Model	–	3TNV82A	3TNV86CT	4TNV88C	4TNV88C (standard) 4TNV86CT (option)	4TNV88C (standard) 4TNV86CT (option)	4TNV88C (standard) 4TNV86CT (option)
Output	kW	18.5	28.5	34.3	34.3 (series) 41.1 (option)	34.3 (series) 41.1 (option)	34.3 (series) 41.1 (option)
Max. torque	Nm at rpm	85.5 at 1,200	132.2 at 1,690	140.4 at 1,820	140.4 at 1,820 167 at 1,820 (option)	140.4 at 1,820 167 at 1,820 (option)	140.4 at 1,820 167 at 1,820 (option)
Displacement	cm^3	1,331	1,568	2,190	2,190 (series) 2,091 (option)	2,190 (series) 2,091 (option)	2,190 (series) 2,091 (option)
Exhaust emission stage	–	EU level V	EU level V	EU level V	EU level V	EU level V	EU level V
Power transmission	Unit						
Drive	–	Variable, hydrostatic drive system					
Travel speed	km/h	20	20 (series) 30 (option)	20 (series) 30 (option)	20 (series) 30 (option)	20 (series) 30 (option)	20 (series) 30 (option)
Axles	–	Axle carrier made of cast steel with wheel hub motors		Planetary steering axle	Planetary steering axle	Planetary steering axle	Planetary steering axle
Total oscillation angle	°	7	7	8	8	8	8
Differential lock	%	Compensation differential hydraulic (option)	Compensation differential hydraulic (option)	100% (option FA)	100% (option FA)	100% front axle	100% front axle
Service brake	–	Hydrostatically	Hydrostatically	Hydr. disc brake		Hydr. disc brake	
Parking brake	–	Spring-loaded multi-plate braking system, electro-hydraulically controlled to HA		mech. disc brake		mech. disc brake	
Standard tyres	–	27x10.5-15	27x10.5-15	10.5-18	10.5-18	12.0-18	12.0-18
Steering and work hydraulics	Unit						
Steering system functionality	–	Hydrostatic all-wheel steering with emergency steering properties					
		Front-wheel-drive and crab steering (option)			Front wheel steering (option)		
Functioning of work hydraulics	–	Gear pump					
Steering cylinder	–	Double-acting with independent final position synchronization					
Steering lock max.	°	38	38	38	38	38	38
Max. flow rate of pump	l/min	20	30	56	56	56	56
Max. pumping capacity optional	l/min	-	56	-	90	90	90
Max. pressure	bar	240	240	240	240	240	240
Quickhitch system	–	HV/WL - S			HV/WL - C		
Pilot operation	–	hydraulic					
Pilot control of 3rd control circuit	–	electrical					

Technical Data

Kinematics	Unit	KL12.5	KL14.5	KL18.5	KL19.5	KL25.5	KL25.5T
Design system	–	Z-kinematics	Z-kinematics	P-kinematics	P-kinematics	P-kinematics	Z-kinematics
Lifting force calculation according to ISO 14397-2 hydraulic	kN	11.5	15.8	37	32.5	32.5	32.5
Tearout force calculation as per ISO 14397-2	kN	12.2	13.3	31.7	28	28	28
Lift cylinder raising/lowering	s	6.0/4.5	6.0/4.5	4.6/2.9	4.8/3.2	4.8/3.2	6.7/5.0
Tilt in/tilt out tilt cylinder: (upper position of the loader unit)	s	2.4/3.3	2.2/2.4	2.6/3.1	2.1/2.0	2.1/2.0	3.5/3.0
Tilt-in / tilt-out angle	°	43/40	43/40	45/40	43/45	43/45	30/40
Bucket tipping load	kg	1,200	1,400	1,800	1,980	2,340	2,500
Stacking payload S=1.25	kg	750	900	1,200 (1,360)*	1,600	1,750	1,650
Capacities	Unit						
Fuel tank	l	48	48	60	60	60	60
Hydraulic oil tank	l	40	40	58	58	58	58
Electrical system	Unit						
Operating voltage	V	12	12	12	12	12	12
Battery / alternator	Ah/A	74/55	74/55	74/80	74/80	74/80	74/80
Starter motor	kW	1.7	1.7	2.3	2.3	2.3	2.3
Noise emissions**	Unit						
Measured value	dB(A)	99	99	100.3	100.3	100.3	100.3
Guaranteed value	dB(A)	101	101	101	101	101	101
Noise level at the operator's ear	dB(A)	80	80	79	79	79	79
Vibrations***	Unit						
Vibration total value of the upper extremities of the body	m/s^2	< 2.5 m/s^2 (< 8.2 $feet/s^2$)					
Maximum weighted average effective value of acceleration for the body	m/s^2	< 0.5 m/s^2 (< 1.64 $feet/s^2$)**** 1.28 m/s^2 (4.19 $feet/s^2$)*****					

* with Smart Ballast (8 x 12.5 kg)

** Information: The measurement occurs as per the requirements of the standard EN 474 and the directive 2000/14/EC. Measuring station: Paved surface.

*** Uncertainties of measurement as specified in ISO/TR 25398:2006. Please instruct or inform the operator of possible dangers caused by vibrations.

**** On flat and solid ground with the corresponding driving style

**** Application in extraction under harsh environmental conditions

Technical Data

KL12.5: Standard loader unit	Unit	Standard bucket with rip-out teeth	Standard bucket without rip-out teeth	Power grab bucket with rip-out teeth	Power grab bucket without rip-out teeth
					
Bucket capacity	m^3	0.35	0.35	0.23	0.23
Material density	t/m^3	1.80	1.80	1.80	1.80
Overall length of attachment	mm	780	685	774	678
Total vehicle length without attachment	mm	3,460	3,460	3,460	3,460
Total vehicle length with attachment tilted max. 200 mm above ground	mm	4,050	3,980	4,090	4,020
Bucket width	mm	1,250	1,250	1,250	1,250
Bucket swivel point	mm	2,800	2,800	2,800	2,800
Load-over height	mm	2,680	2,680	2,600	2,600
Dumping height	mm	2,290	2,290	2,240	2,240
Dump reach	mm	260	260	200	200
Scraping depth	mm	60	60	140	140
Weight of attachment	kg	113	109	156	151
Operating weight*	kg	1,955	1,951	1,998	1,993

* basic equipment with cabin and attachment

Technical Data

KL14.5: Standard loader unit	Unit	Standard bucket with rip-out teeth	Standard bucket without rip-out teeth	Power grab bucket with rip-out teeth	Power grab bucket without rip-out teeth
					
Bucket capacity	m^3	0.36	0.36	0.23	0.23
Material density	t/m^3	1.80	1.80	1.80	1.80
Overall length of attachment	mm	829	753	677	773
Total vehicle length without attachment	mm	3,460	3,460	3,460	3,460
Total vehicle length with attachment tilted max. 200 mm above ground	mm	4,090	4,040	4,090	4,020
Bucket width	mm	1,400	1,400	1,400	1,400
Bucket swivel point	mm	2,800	2,800	2,800	2,800
Load-over height	mm	2,680	2,670	2,600	2,600
Dumping height	mm	2,260	2,240	2,240	2,240
Dump reach	mm	290	300	200	200
Scraping depth	mm	60	70	140	140
Weight of attachment	kg	129	137	189	183
Operating weight*	kg	2,095	2,103	2,155	2,149

* basic equipment with cabin and attachment

Dimensions

Side view

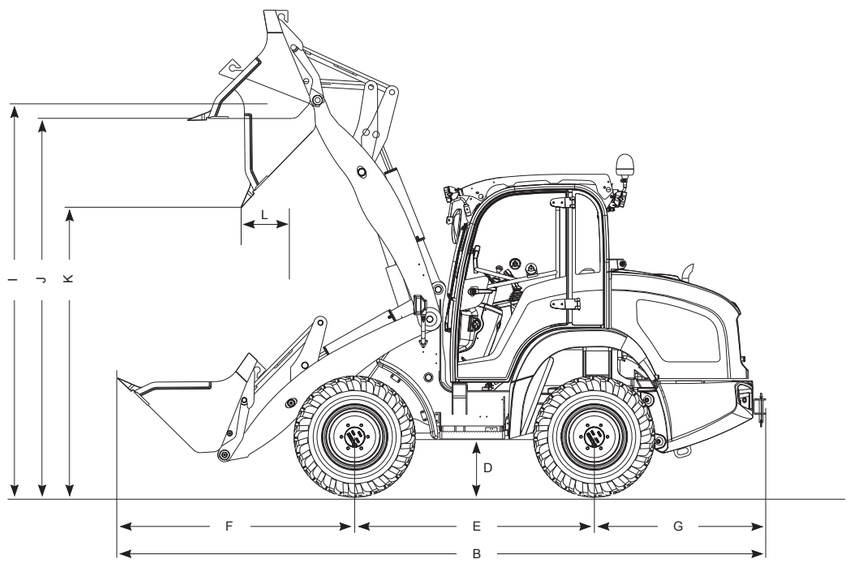

Front view

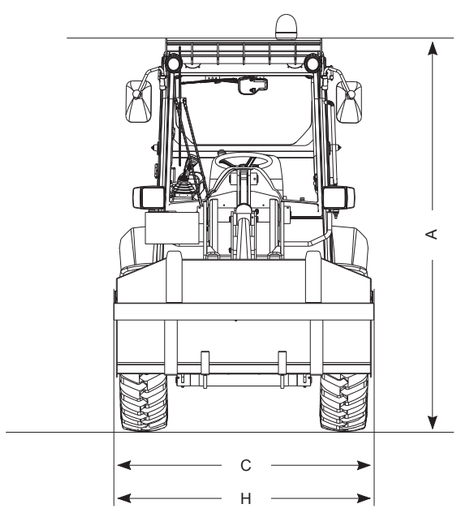

Dimensions

Standard equipment with standard bucket		Unit	KL12.5	KL14.5	KL18.5	KL19.5	KL25.5	KL25.5T
A	Height*	mm	2,170	2,170	2,390	2,390	2,390	2,470
B	Length	mm	4,050	4,090	4,790	4,950	4,950	5,350
C	Width*	mm	1,260	1,260	1,590	1,590	1,595	1,595
D	Ground clearance	mm	220	220	280	280	280	280
E	Wheel base	mm	1,525	1,525	1,850	1,850	1,850	2,000
F	Centre of front axle to tip of teeth	mm	1,390	1,430	1,620	1,780	1,780	1,992
G	Centre of rear axle to end of vehicle	mm	1,140	1,140	1,320	1,320	1,320	1,320
H	Bucket width	mm	1,250	1,400	1,650	1,650	1,650	1,650
I	Bucket swivel point	mm	2,800	2,800	2,840	3,050	3,050	4,270
J	Load-over height	mm	2,680	2,680	2,610	2,890	2,900	4,010
K	Dumping height	mm	2,180	2,140	2,080	2,320	2,330	3,500
L	Dump reach	mm	260	290	270	315	315	810
-	Stacking height	mm	2,630	2,630	2,600	2,950	2,950	4,030
-	Turning radius (over tires)	mm	2,000	2,000	2,700	2,700	2,700	2,900

Standard equipment with standard bucket		Unit	KL19.5L	KL25.5L
A	Height*	mm	2,390	2,390
B	Length	mm	5,140	5,140
C	Width*	mm	1,590	1,595
D	Ground clearance	mm	280	280
E	Wheel base	mm	1,850	1,850
F	Centre of front axle to tip of teeth	mm	1,970	1,970
G	Centre of rear axle to end of vehicle	mm	1,320	1,320
H	Bucket width	mm	1,650	1,650
I	Bucket swivel point	mm	3,300	3,300
J	Load-over height	mm	3,150	3,150
K	Dumping height	mm	2,650	2,650
L	Dump reach	mm	410	410
-	Stacking height	mm	3,200	3,200
-	Turning radius (over tires)	mm	2,700	2,700

*with standard tyres

Load-bearing capacity diagram

KL25.5T (with cabin)

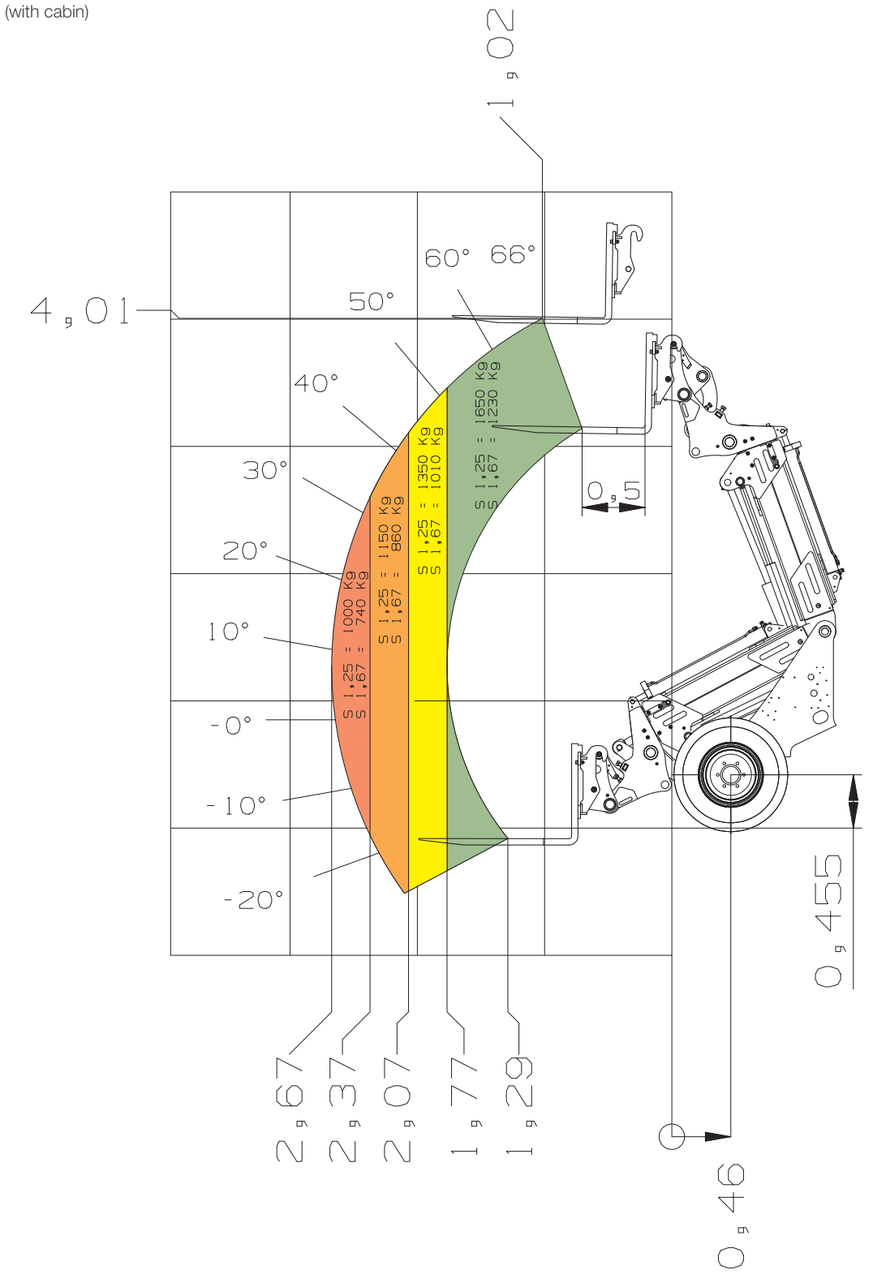

Load-bearing capacity diagram

Load hook

A (Load hooks with tilted quickhitch facility)

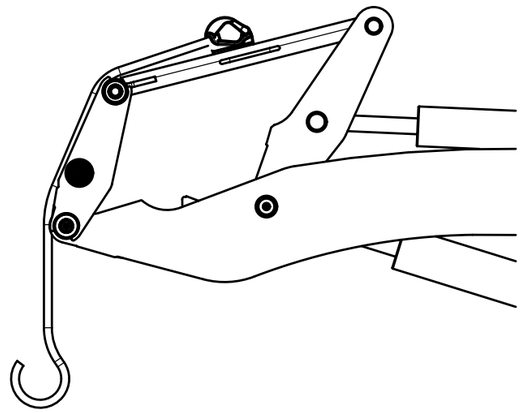

B (with emptied quickhitch facility)

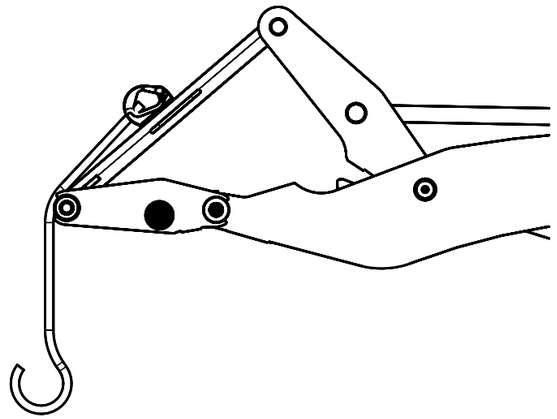

Load hook on rocker arm		Unit	KL12.5	KL14.5
A	Payload for elongated loader unit and tilted quickhitch facility	kg	600	750
B	Payload for elongated loader unit and emptied quickhitch facility	kg	750	900

www.kramer.de

KRAMER
on the safe side

Wheel loader
Tipping load: 1,140 - 7,000 kg

telescopic wheel loaders
Tipping load: 2,500 - 5,500 kg

Telehandler
Payload: 2,700 - 5,500 kg

Service that can be seen

Focus on your daily activities – with our comprehensive services, we take care of the rest. We are there when you need us: capable, fast, and directly on site if necessary.

Repair & maintenance

Academy

Telematics

Insurance

Spare parts

Financial Solutions

KA.EMEA.10204.V04.EN-GB

01/2021 EN-GB